100 TON

Lattice Boom Truck Crane

NESS & CAMPBELL CRANE, INC.

40′ to 180′ Main Boom
30′ to 60′ Jib
Jib Offsets: 0 – 15 – 30 Degrees

Notes:

FMC

General Specifications

Link-Belt® 100-ton (90.70 metric ton)

Wire rope truck crane

GENERAL INFORMATION ONLY

HC-218A

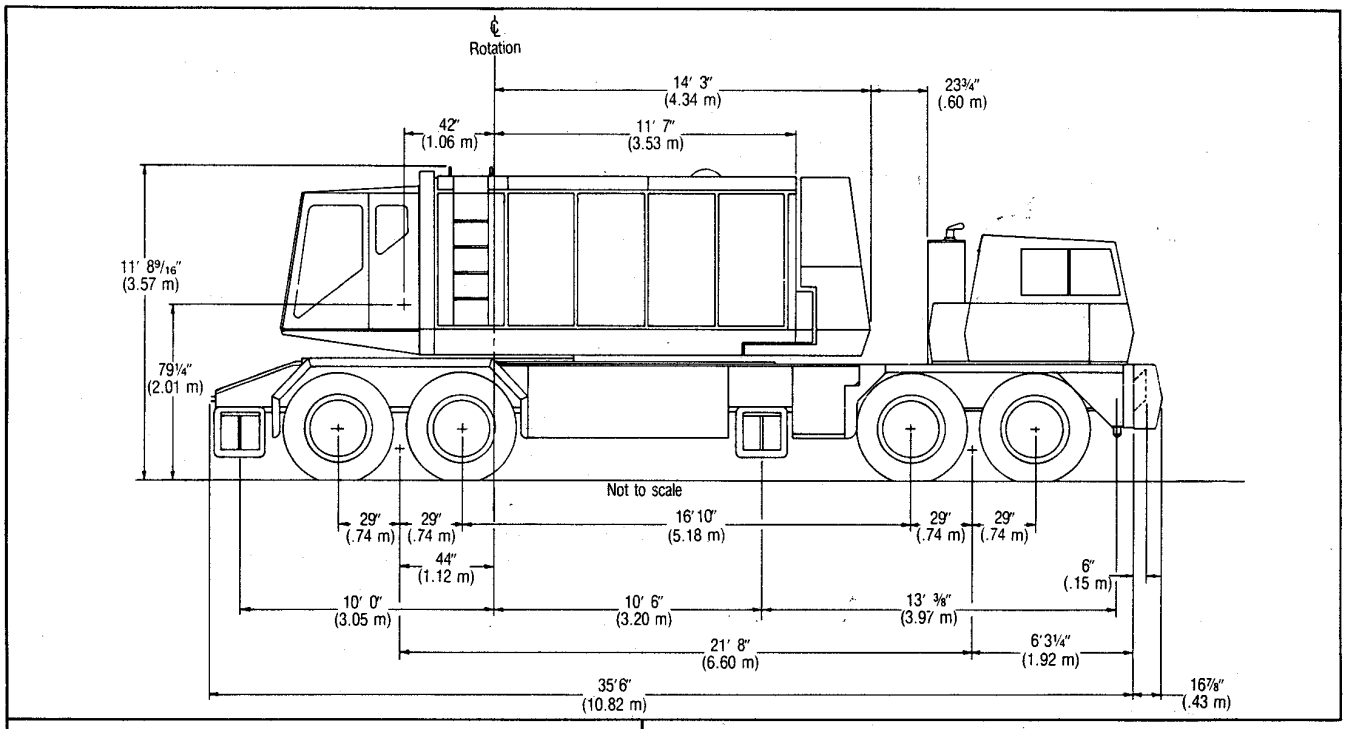

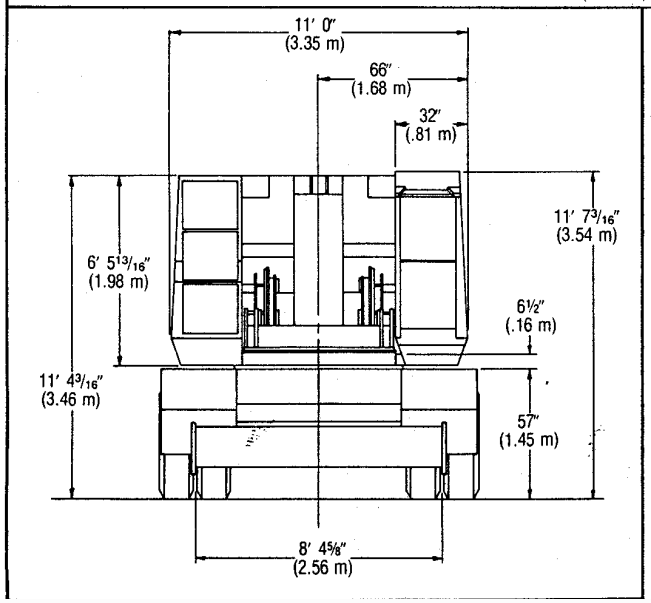

This information is for reference use only. Operators manual should be consulted and adhered to.
Please contact NESS & CAMPBELL CRANE at **info@nessandcampbell.com** for further information.

NESS & CAMPBELL CRANE
Portland: 503-283-3111
Seattle: 206-784-1054
www.NESSandCAMPBELL.com

HC-218A open throat boom

Length	Radius Feet	Radius meters	Angle Degrees	Boom point height ② Feet	Boom point height ② meters	"A" upper & "A" bumper ① counterweights — On outriggers — Over rear Pounds	Over rear kilograms	Over side and 360° swing ③ Pounds	Over side and 360° swing ③ kilograms	On tires (static) — Over rear Pounds	Over rear kilograms	Over side Pounds	Over side kilograms	"AB" upper & "A" bumper counterweights — On outriggers only — Over rear Pounds	Over rear kilograms	Over side and 360° swing ③ Pounds	Over side and 360° swing ③ kilograms
70' (21.34 m)	25	7.62	72.1	74' 0"	22.54	100,300*	45 495*	90,000	40 823	53,400	24 221	31,700	14 378	104,500*	47 400*	101,000*	45 812*
	30	9.14	67.8	72' 2"	21.99	84,400*	38 283*	66,200	30 027	42,300	19 186	24,600	11 158	87,900*	39 870*	77,900	35 334
	35	10.67	63.3	69' 10"	21.29	71,800	32 567	51,900	23 541	34,700	15 739	19,900	9 026	75,600*	34 291*	61,300	27 805
	40	12.19	58.6	67' 1"	20.45	59,000	26 761	42,400	19 232	29,200	13 244	16,400	7 438	66,200*	30 027*	50,200	22 770
	50	15.24	48.4	59' 8"	18.19	42,900	19 459	30,500	13 834	21,800	9 888	11,700	5 307	48,800	22 135	36,400	16 510
	60	18.29	36.2	48' 8"	14.84	33,300	15 104	23,300	10 568	17,000	7 711	8,600	3 900	38,000	17 236	28,000	12 700
	70	21.34	18.2	29' 2"	8.90	26,800	12 156	18,500	8 391	13,500	6 123	6,400	2 902	30,700	13 925	22,400	10 160
80' (24.38 m)	17	5.18	80.3	86' 2"	26.27	141,600*	64 228*	135,700*	61 552*	74,100*	33 611*	48,400*	21 953*	141,600*	64 228*	141,600*	64 228*
	18	5.49	79.6	86' 0"	26.22	134,900*	61 189*	128,300*	58 195*	72,100*	32 704*	45,900*	20 819*	138,800*	62 958*	137,000*	62 142*
	19	5.79	78.8	85' 10"	26.16	128,500*	58 286*	121,700*	55 202*	70,200*	31 842*	43,800*	19 867*	133,900*	60 736*	130,200*	59 057*
	20	6.10	78.1	85' 8"	26.10	122,700*	55 655*	115,900*	52 571*	68,500*	31 071*	41,700*	18 914*	127,800*	57 969*	123,900*	56 200*
	25	7.62	74.4	84' 5"	25.73	99,800*	45 268*	90,000	40 823	53,200	24 131	31,500	14 288	104,000*	47 173*	100,600*	45 631*
	30	9.14	70.7	82' 10"	25.25	83,900*	38 056*	66,200	30 027	42,100	19 096	24,400	11 067	87,500*	39 689*	77,800	35 289
	35	10.67	66.8	80' 11"	24.65	71,600	32 477	51,800	23 496	34,500	15 648	19,700	8 935	74,900*	33 974*	61,200	27 759
	40	12.19	62.9	78' 6"	23.94	58,900	26 716	42,300	19 186	29,000	13 154	16,200	7 348	64,400*	29 211*	50,100	22 724
	50	15.24	54.5	72' 5"	22.08	42,800	19 413	30,300	13 743	21,600	9 797	11,500	5 216	48,600	22 044	36,200	16 420
	60	18.29	45.1	64' 0"	19.50	33,100	15 013	23,100	10 477	16,800	7 620	8,400	3 810	37,800	17 145	27,900	12 655
	70	21.34	33.8	51' 10"	15.80	26,600	12 065	18,400	8 346	13,400	6 078	6,300	2 857	30,600	13 879	22,300	10 115
	80	24.38	17.0	30' 9"	9.37	22,000	9 979	14,900	6 758	10,900	4 944	4,700	2 131	25,400	11 521	18,300	8 300
90' (27.43 m)	18	5.49	80.7	96' 2"	29.31	127,700*	57 923*	127,700*	57 923*	71,500*	32 431*	45,400*	20 593*	127,700*	57 923*	127,700*	57 923*
	19	5.79	80.1	96' 0"	29.26	125,500*	56 925*	121,200*	54 975*	69,700*	31 615*	43,400*	19 685*	125,500*	56 925*	125,500*	56 925*
	20	6.10	79.4	95' 10"	29.21	122,100*	55 383*	115,400*	52 344*	67,900*	30 798*	41,200*	18 688*	123,300*	55 927*	123,300*	55 927*
	25	7.62	76.2	94' 9"	28.88	99,300*	45 041*	89,900	40 777	53,000	24 040	31,300	14 197	103,500*	46 946*	100,100*	45 404*
	30	9.14	72.9	93' 4"	28.46	83,500*	37 874*	66,100	29 982	41,900	19 005	24,200	10 976	87,000*	39 462*	77,700	35 244
	35	10.67	69.5	91' 8"	27.94	71,500	32 431	51,700	23 450	34,300	15 558	19,500	8 845	73,100*	33 157*	61,100	27 714
	40	12.19	66.1	89' 7"	27.32	58,700	26 625	42,200	19 141	28,800	13 063	16,000	7 257	62,800*	28 485*	49,900	22 634
	50	15.24	58.9	84' 5"	25.73	42,600	19 323	30,200	13 698	21,400	9 706	11,300	5 125	47,900*	21 727*	36,100	16 374
	60	18.29	51.1	77' 5"	23.59	32,900	14 923	23,000	10 432	16,600	7 529	8,200	3 719	37,700	17 100	27,700	12 564
	70	21.34	42.4	68' 0"	20.72	26,500	12 020	18,200	8 255	13,200	5 987	6,100	2 766	30,400	13 789	22,200	10 069
	80	24.38	31.8	54' 9"	16.69	21,900	9 933	14,800	6 713	10,700	4 853	4,500	2 041	25,200	11 430	18,100	8 210
	90	27.43	16.0	32' 2"	9.82	18,400	8 346	12,100	5 488	8,700	3 946	3,300	1 496	21,300	9 661	15,100	6 849
100' (30.48 m)	20	6.10	80.5	106' 0"	32.30	114,900*	52 117*	114,900*	52 117*	67,600*	30 662*	40,800*	18 506*	114,900*	52 117*	114,900*	52 117*
	25	7.62	77.6	105' 0"	32.01	98,800*	44 814*	89,900	40 777	52,700	23 904	31,100	14 106	103,000*	46 720*	99,700*	45 223*
	30	9.14	74.6	103' 9"	31.63	83,000*	37 648*	65,900	29 891	41,700	18 914	23,900	10 840	86,600*	39 281*	77,600	35 198
	35	10.67	71.6	102' 3"	31.17	71,100*	32 250*	51,500	23 360	34,000	15 422	19,200	8 708	71,700*	32 522*	60,900	27 623
	40	12.19	68.6	100' 5"	30.62	58,500	26 535	42,000	19 050	28,500	12 927	15,700	7 121	61,500*	27 895*	49,700	22 543
	50	15.24	62.3	95' 11"	29.22	42,500	19 277	30,000	13 607	21,200	9 616	11,000	4 989	46,700*	21 182*	35,900	16 283
	60	18.29	55.6	89' 10"	27.39	32,700	14 832	22,700	10 296	16,300	7 393	8,000	3 628	37,400	16 964	27,500	12 473
	70	21.34	48.3	82' 0"	25.00	26,200	11 884	18,000	8 164	12,900	5 851	5,800	2 630	30,200	13 698	22,000	9 979
	80	24.38	40.1	71' 9"	21.87	21,700	9 842	14,600	6 622	10,400	4 717	4,300	1 950	25,000	11 339	17,900	8 119
	90	27.43	30.1	57' 6"	17.53	18,200	8 255	12,000	5 443	8,500	3 855	3,000	1 360	21,200	9 616	14,900	6 758
	100	30.48	15.2	33' 7"	10.23	15,500	7 030	9,900	4 490	7,000	3 175	2,100	952	18,100	8 210	12,500	5 669
110' (33.53 m)	25	7.62	78.7	115' 3"	35.12	97,700*	44 315*	89,900	40 777	52,600	23 858	30,900	14 016	97,700*	44 315*	97,700*	44 315*
	30	9.14	76.1	114' 1"	34.78	82,600*	37 466*	65,900	29 891	41,500	18 824	23,800	10 795	85,600*	38 827*	77,500	35 153
	35	10.67	73.4	112' 9"	34.36	70,600*	32 023*	51,400	23 314	33,900	15 376	19,100	8 663	70,600*	32 023*	60,900	27 623
	40	12.19	70.6	111' 1"	33.87	58,400	26 489	41,900	19 005	28,300	12 836	15,600	7 076	60,500*	27 442*	49,600	22 498
	50	15.24	65.0	107' 0"	32.63	42,300	19 186	29,900	13 562	21,000	9 525	10,900	4 944	45,900*	20 819*	35,800	16 238
	60	18.29	59.1	101' 9"	31.01	32,600	14 787	22,600	10 251	16,200	7 348	7,800	3 538	37,000*	16 782*	27,300	12 383
	70	21.34	52.8	95' 0"	28.95	26,100	11 838	17,900	8 119	12,800	5 805	5,700	2 585	30,000	13 607	21,900	9 933
	80	24.38	45.9	86' 5"	26.33	21,600	9 797	14,500	6 577	10,300	4 672	4,100	1 859	24,800	11 249	17,800	8 073
	90	27.43	38.2	75' 4"	22.95	18,100	8 210	11,900	5 397	8,400	3 810	2,900	1 315	21,100	9 570	14,800	6 713
	100	30.48	28.7	60' 2"	18.33	15,400	6 985	9,800	4 445	6,800	3 084	—	—	18,000	8 164	12,500	5 669
	110	33.53	14.5	34' 11"	10.63	13,200	5 987	8,200	3 719	5,600	2 540	—	—	15,500	7 030	10,500	4 762

① ② ③ — Refer to page 7.

(continued)

GENERAL INFORMATION ONLY

This information is for reference use only. Operators manual should be consulted and adhered to.
Please contact NESS & CAMPBELL CRANE at info@nessandcampbell.com for further information.

NESS & CAMPBELL CRANE
Portland: 503-283-3111
Seattle: 206-784-1054
www.NESSandCAMPBELL.com

218A open throat boom						"A" upper & "A" bumper ① counterweights								"AB" upper & "A" bumper counterweights			
						On outriggers				On tires (static)				On outriggers only			
	Radius		Angle	Boom point height ②		Over rear		Over side and 360° swing ③		Over rear		Over side		Over rear		Over side and 360° swing ③	
Length	Feet	meters	Degrees	Feet	meters	Pounds	kilograms	Pounds	kilograms	Pounds	kilograms	Pounds	kilograms	Pounds	kilograms	Pounds	kilograms
120' (36.58 m)	25	7.62	79.7	125' 5"	38.22	89,500*	40 596*	89,500*	40 596*	52,400	23 768	30,800	13 970	89,500*	40 596*	89,500*	40 596*
	30	9.14	77.2	124' 5"	37.91	82,200*	37 285*	65,800	29 846	41,300	18 733	23,600	10 704	83,800*	38 011*	77,400	35 108
	35	10.67	74.8	123' 2"	37.53	69,600*	31 570*	51,300	23 269	33,700	15 286	18,900	8 572	69,600*	31 570*	60,800	27 578
	40	12.19	72.3	121' 8"	37.08	58,300	26 444	41,800	18 960	28,200	12 791	15,400	6 985	59,600*	27 034*	49,500	22 452
	50	15.24	67.2	118' 0"	35.96	42,200	19 141	29,700	13 471	20,800	9 434	10,700	4 853	45,400*	20 593*	35,600	16 147
	60	18.29	61.9	113' 3"	34.51	32,500	14 741	22,500	10 205	16,000	7 257	7,600	3 447	36,300*	16 465*	27,200	12 337
	70	21.34	56.3	107' 3"	32.69	26,000	11 793	17,800	8 073	12,600	5 715	5,500	2 494	29,800*	13 517*	21,700	9 842
	80	24.38	50.4	99' 10"	30.42	21,500	9 752	14,300	6 486	10,100	4 581	3,900	1 769	24,700	11 203	17,700	8 028
	90	27.43	43.9	90' 6"	27.59	18,000	8 164	11,700	5 307	8,200	3 719	2,700	1 224	20,900	9 480	14,700	6 667
	100	30.48	36.5	78' 8"	23.98	15,200	6 894	9,700	4 399	6,700	3 039	—	—	17,900	8 119	12,300	5 579
	110	33.53	27.4	62' 8"	19.09	13,100	5 942	8,100	3 674	5,400	2 449	—	—	15,400	6 985	10,400	4 717
	120	36.58	13.9	36' 1"	11.01	11,300	5 125	6,700	3 039	4,400	1 995	—	—	13,400	6 078	8,900	4 036
130' (39.62 m)	25	7.62	80.5	135' 7"	41.32	82,900*	37 602*	82,900*	37 602*	52,200	23 677	30,600	13 879	82,900*	37 602*	82,900*	37 602*
	30	9.14	78.2	134' 7"	41.03	77,100*	34 971*	65,700	29 801	41,200	18 688	23,400	10 614	77,100*	34 971*	77,100*	34 971*
	35	10.67	76.0	133' 6"	40.68	68,800*	31 207*	51,200	23 223	33,500	15 195	18,800	8 527	68,800*	31 207*	60,600	27 487
	40	12.19	73.7	132' 1"	40.27	58,200	26 399	41,700	18 914	28,000	12 700	15,300	6 939	58,900*	26 716*	49,400	22 407
	50	15.24	69.0	128' 9"	39.24	42,100	19 096	29,600	13 426	20,700	9 389	10,500	4 762	45,200*	20 502*	35,500	16 102
	60	18.29	64.2	124' 5"	37.93	32,300	14 651	22,500	10 205	15,800	7 166	7,500	3 401	35,700*	16 193*	27,000	12 246
	70	21.34	59.2	119' 1"	36.29	25,800	11 702	17,600	7 983	12,400	5 624	5,300	2 404	29,200*	13 244*	21,600	9 797
	80	24.38	54.0	112' 5"	34.28	21,300	9 661	14,200	6 441	9,900	4 490	3,800	1 723	24,400*	11 067*	17,500	7 937
	90	27.43	48.3	104' 5"	31.82	17,800	8 073	11,600	5 261	8,000	3 628	2,500	1 133	20,700	9 389	14,500	6 577
	100	30.48	42.1	94' 5"	28.79	15,100	6 849	9,500	4 309	6,500	2 948	—	—	17,700	8 028	12,200	5 533
	110	33.53	35.0	81' 11"	24.96	12,900	5 851	7,900	3 583	5,200	2 358	—	—	15,300	6 939	10,300	4 672
	120	36.58	26.3	65' 0"	19.82	11,100	5 034	6,600	2 993	4,200	1 905	—	—	13,300	6 032	8,700	3 946
	130	39.62	13.3	37' 4"	11.37	9,600	4 354	5,500	2 494	3,300	1 496	—	—	11,600	5 261	7,400	3 356
140' (42.67 m)	30	9.14	79.1	144' 10"	44.14	70,700*	32 068*	65,600	29 755	41,000	18 597	23,200	10 523	70,700*	32 068*	70,700*	32 068*
	35	10.67	77.0	143' 9"	43.82	62,800*	28 485*	51,100	23 178	33,300	15 104	18,600	8 436	62,800*	28 485*	60,500	27 442
	40	12.19	74.9	142' 6"	43.44	56,600*	25 673*	41,600	18 869	27,800	12 609	15,100	6 849	56,600*	25 673*	49,200	22 316
	50	15.24	70.6	139' 5"	42.49	41,900	19 005	29,400	13 335	20,500	9 298	10,300	4 672	44,400*	20 139*	35,300	16 011
	60	18.29	66.2	135' 5"	41.28	32,100	14 560	22,300	10 115	15,600	7 076	7,300	3 311	35,100*	15 921*	26,900	12 201
	70	21.34	61.6	130' 7"	39.79	25,600	11 611	17,500	7 937	12,200	5 533	5,100	2 313	28,700*	13 018*	21,400	9 706
	80	24.38	56.9	124' 7"	37.98	21,100	9 570	14,000	6 350	9,700	4 399	3,600	1 632	23,900*	10 840*	17,400	7 892
	90	27.43	51.8	117' 5"	35.79	17,600	7 983	11,400	5 170	7,800	3 538	2,300	1 043	20,600	9 344	14,300	6 486
	100	30.48	46.4	108' 9"	33.16	14,900	6 758	9,400	4 263	6,300	2 857	—	—	17,500	7 937	12,000	5 443
	110	33.53	40.5	98' 3"	29.94	12,700	5 760	7,700	3 492	5,000	2 267	—	—	15,100	6 849	10,100	4 581
	120	36.58	33.7	85' 0"	25.90	10,900	4 944	6,400	2 902	4,000	1 814	—	—	13,100	5 942	8,500	3 855
	130	39.62	25.4	67' 4"	20.52	9,500	4 309	5,300	2 404	3,200	1 451	—	—	11,400	5 170	7,300	3 311
	140	42.67	12.8	38' 6"	11.72	8,200	3 719	4,300	1 950	2,400	1 088	—	—	10,000	4 535	6,200	2 812
150' (45.72 m)	30	9.14	79.8	155' 0"	47.24	63,000*	28 576*	63,000*	28 576*	40,800	18 506	23,000	10 432	63,000*	28 576*	63,000*	28 576*
	35	10.67	77.9	154' 0"	46.94	57,700*	26 172*	50,900	23 087	33,100	15 013	18,400	8 346	57,700*	26 172*	57,700*	26 172*
	40	12.19	75.9	152' 10"	46.59	52,000*	23 586*	41,400	18 778	27,600	12 519	14,900	6 758	52,000*	23 586*	49,100	22 271
	50	15.24	71.9	150' 0"	45.71	40,800*	18 506*	29,300	13 290	20,300	9 207	10,100	4 581	40,800*	18 506*	35,200	15 966
	60	18.29	67.9	146' 4"	44.59	31,900	14 469	22,200	10 069	15,400	6 985	7,100	3 220	33,900*	15 376*	26,700	12 110
	70	21.34	63.7	141' 10"	43.22	25,400	11 521	17,300	7 847	12,000	5 443	4,900	2 222	28,200*	12 791*	21,200	9 616
	80	24.38	59.3	136' 5"	41.57	20,900	9 480	13,800	6 259	9,500	4 309	3,300	1 496	23,400*	10 614*	17,200	7 801
	90	27.43	54.8	129' 11"	39.59	17,400	7 892	11,200	5 080	7,600	3 447	2,100	952	20,100*	9 117*	14,100	6 395
	100	30.48	50.0	122' 2"	37.24	14,700	6 667	9,200	4 173	6,100	2 766	—	—	17,200*	7 801*	11,800	5 352
	110	33.53	44.8	113' 0"	34.44	12,500	5 669	7,500	3 401	4,800	2 177	—	—	14,800*	6 713*	9,900	4 490
	120	36.58	39.0	101' 10"	31.04	10,800	4 898	6,200	2 812	3,800	1 723	—	—	12,900	5 851	8,400	3 810
	130	39.62	32.5	88' 0"	26.81	9,300	4 218	5,100	2 313	3,000	1 360	—	—	11,200	5 080	7,100	3 220
	140	42.67	24.5	69' 6"	21.20	8,000	3 628	4,200	1 905	2,200	997	—	—	9,800	4 445	6,000	2 721
	150	45.72	12.4	39' 7"	12.06	6,900	3 129	3,400	1 542	—	—	—	—	8,600	3 900	5,000	2 267

①②③ — Refer to page 7.

This information is for reference use only. Operators manual should be consulted and adhered to.
Please contact NESS & CAMPBELL CRANE at info@nessandcampbell.com for further information.

NESS & CAMPBELL CRANE
Portland: 503-283-3111
Seattle: 206-784-1054
www.NESSandCAMPBELL.com

HC-218A open throat boom						"A" upper & "A" bumper ① counterweights								"AB" upper & "A" bumper counterweights			
						On outriggers				On tires (static)				On outriggers only			
	Radius		Angle	Boom point height ③		Over rear		Over side and 360° swing ③		Over rear		Over side		Over rear		Over side and 360° swing ③	
Length	Feet	meters	Degrees	Feet	meters	Pounds	kilograms	Pounds	kilograms	Pounds	kilograms	Pounds	kilograms	Pounds	kilograms	Pounds	kilograms
160' (48.77 m)	30	9.14	80.5	165' 2"	50.33	58,200*	26 399*	58,200*	26 399*	40,600	18 415	22,800	10 341	58,200*	26 399*	58,200*	26 399*
	35	10.67	78.6	164' 3"	50.05	53,500*	24 267*	50,800	23 042	32,900	14 923	18,200	8 255	53,500*	24 267*	53,500*	24 267*
	40	12.19	76.8	163' 2"	49.72	48,400*	21 953*	41,300	18 733	27,300	12 383	14,700	6 667	48,400*	21 953*	48,400*	21 953*
	50	15.24	73.1	160' 5"	48.90	38,100*	17 281*	29,100	13 195	20,000	9 071	9,900	4 490	38,100*	17 281*	35,000	15 875
	60	18.29	69.3	157' 1"	47.87	31,700*	14 378*	22,000	9 979	15,200	6 894	6,800	3 084	31,700*	14 378*	26,500	12 020
	70	21.34	65.4	152' 11"	46.60	25,200	11 430	17,100	7 756	11,800	5 352	4,700	2 131	25,600*	11 611*	21,000	9 525
	80	24.38	61.4	147' 11"	45.07	20,700	9 389	13,600	6 168	9,300	4 218	3,100	1 406	21,500*	9 752*	17,000	7 711
	90	27.43	57.3	141' 11"	43.27	17,200	7 801	11,000	4 989	7,300	3 311	—	—	18,700*	8 482*	13,900	6 304
	100	30.48	52.9	135' 0"	41.14	14,500	6 577	8,900	4 036	5,800	2 630	—	—	16,400*	7 438*	11,600	5 261
	110	33.53	48.3	126' 9"	38.64	12,300	5 579	7,300	3 311	4,600	2 086	—	—	14,400*	6 531*	9,700	4 399
	120	36.58	43.3	117' 0"	35.67	10,500	4 762	6,000	2 721	3,600	1 632	—	—	12,700	5 760	8,100	3 674
	130	39.62	37.8	105' 4"	32.10	9,000	4 082	4,900	2 222	2,700	1 224	—	—	11,000	4 989	6,800	3 084
	140	42.67	31.4	90' 10"	27.68	7,800	3 538	3,900	1 769	2,000	907	—	—	9,600	4 354	5,700	2 585
	150	45.72	23.7	71' 8"	21.85	6,700	3 039	3,100	1 406	—	—	—	—	8,400	3 810	4,800	2 177
	160	48.77	12.0	40' 8"	12.38	5,800	2 630	2,400	1 088	—	—	—	—	7,300	3 311	4,000	1 814
170' (51.82 m)	35	10.67	79.3	174' 5"	53.16	49,000*	22 226*	49,000*	22 226*	Not applicable				49,000*	22 226*	49,000*	22 226*
	40	12.19	77.6	173' 5"	52.85	42,400*	19 232*	41,100	18 642					42,400*	19 232*	42,400*	19 232*
	50	15.24	74.1	170' 10"	52.08	34,900*	15 830*	28,900	13 108					34,900*	15 830*	34,800	15 785
	60	18.29	70.6	167' 8"	51.11	29,500*	13 380*	21,800	9 888					29,500*	13 380*	26,300	11 929
	70	21.34	67.0	163' 10"	49.93	23,000*	10 432*	16,900	7 665					23,000*	10 432*	20,800	9 434
	80	24.38	63.3	159' 2"	48.51	19,600*	8 890*	13,400	6 078					19,600*	8 890*	16,800	7 620
	90	27.43	59.4	153' 8"	46.85	17,000	7 711	10,800	4 898					17,400*	7 892*	13,700	6 214
	100	30.48	55.4	147' 4"	44.90	14,300	6 486	8,700	3 946					15,600*	7 076*	11,400	5 170
	110	33.53	51.2	139' 10"	42.63	12,100	5 488	7,100	3 220					14,000*	6 350*	9,500	4 309
	120	36.58	46.7	131' 2"	39.98	10,300	4 672	5,800	2 630					12,500	5 669	7,900	3 583
	130	39.62	41.9	120' 11"	36.86	8,800	3 991	4,700	2 131					10,800	4 898	6,600	2 993
	140	42.67	36.6	108' 8"	33.13	7,600	3 447	3,700	1 678					9,400	4 263	5,500	2 494
	150	45.72	30.5	93' 7"	28.53	6,500	2 948	2,900	1 315					8,200	3 719	4,600	2 086
	160	48.77	23.0	73' 9"	22.48	5,600	2 540	2,200	997					7,100	3 220	3,800	1 723
	170	51.82	11.6	41' 8"	12.70	4,700	2 131	—	—					6,200	2 812	3,100	1 406
180' (54.86 m)	35	10.67	79.9	184' 7"	56.26	42,900*	19 459*	42,900*	19 459*					42,900*	19 459*	42,900*	19 459*
	40	12.19	78.3	183' 7"	55.96	39,100*	17 735*	39,100*	17 735*					39,100*	17 735*	39,100*	17 735*
	50	15.24	75.0	181' 3"	55.24	32,300*	14 651*	28,700	13 018					32,300*	14 651*	32,300*	14 651*
	60	18.29	71.7	178' 3"	54.33	27,400*	12 428*	21,600	9 797					27,400*	12 428*	26,100*	11 838*
	70	21.34	68.3	174' 7"	53.22	20,500*	9 298*	16,700	7 574					20,500*	9 298*	20,500*	9 298*
	80	24.38	64.8	170' 3"	51.90	17,800*	8 073*	13,200	5 987					17,800*	8 073*	16,600	7 529
	90	27.43	61.3	165' 2"	50.35	16,100*	7 302*	10,600	4 808					16,100*	7 302*	13,500	6 123
	100	30.48	57.6	159' 4"	48.55	14,100	6 395	8,500	3 855					14,800*	6 713*	11,200	5 080
	110	33.53	53.7	152' 6"	46.47	11,900	5 397	6,900	3 129					13,600*	6 168*	9,300	4 218
	120	36.58	49.7	144' 7"	44.06	10,100	4 581	5,600	2 540					12,300	5 579	7,700	3 492
	130	39.62	45.3	135' 5"	41.27	8,600	3 900	4,500	2 041					10,600	4 808	6,400	2 902
	140	42.67	40.7	124' 8"	38.00	7,400	3 356	3,500	1 587					9,200	4 173	5,300	2 404
	150	45.72	35.5	111' 11"	34.12	6,300	2 857	2,700	1 224					8,000	3 628	4,400	1 995
	160	48.77	29.6	96' 3"	29.34	5,300	2 404	2,000	907					6,900	3 129	3,600	1 632
	170	51.82	22.3	75' 9"	23.09	4,500	2 041	—	—					6,000	2 721	2,900	1 315
	180	54.86	11.3	42' 8"	13.01	3,800	1 723	—	—					5,200	2 358	2,300	1 043
	35	10.67	80.5	194' 9"	59.35	38,700*	[illegible]	[illegible]	[illegible]					38,700*	17 554*	38,700*	[illegible]
			[illegible]	193' 10"	59.07	[illegible]		[illegible]	16 329*						16 329*	36,000*	
	50	[illegible]				[illegible]	13 517*	28,500	12 927					29,[illegible]			13 517*
	60	18.29	72.7				11 521*	21,400	9 706					25,400*		[illegible]	11 521*
	70	21.34		[illegible] 4"	56.49	[illegible]		[illegible]	7 484					19,000*	[illegible]	[illegible]	[illegible]
	80		66.3	181' 3"	55.25	16,900*	7 665							16	7 665*	16,400	
		[illegible].43	62.9	176' 6"	53.80	15,500*	7 030*	10,400	4 717					[illegible]	7 030*	13,300	6 034

① ② ③ — Refer to page 7.

(continued)

GENERAL INFORMATION ONLY

This information is for reference use only. Operators manual should be consulted and adhered to.
Please contact NESS & CAMPBELL CRANE at info@nessandcampbell.com for further information.

GENERAL INFORMATION ONLY

HC-218A jib capacities — open throat boom (U.S. units)

Refer to **Notes** page 5.

Boom — tubular; 60″ wide, 50″ deep with open throat top section, 1⅜″ diameter boom pendants, boom live mast and boom midpoint suspension pendants as required.

Jib — tubular; 32″ wide, 24″ deep.

Mounting — rubber tire mobile base; FMC, 8 x 4 drive, 260″ wheelbase, 11′ 0″ wide.

Counterweights — Upper counterweight "AB" — 33,000 lbs.; bumper counterweight "A" — 13,500 lbs.

Boom length	Load radius	Capacities on outriggers — over side and 360° swing①								
		30′ jib			45′ jib			60′ jib		
		Jib angles to boom (jib offset degrees)								
		0°	15°	30°	0°	15°	30°	0°	15°	30°
Feet	Feet	Pounds	Pounds	Pounds	Pounds	Pounds	Pounds	Pounds	Pounds	Pounds
40	16	23,900*								
	17	23,500*								
	18	23,100*								
	19	22,800*			16,500*					
	20	22,400*			16,300*					
	25	20,400*	16,900*		15,400*			13,200*		
	30	18,500*	15,800*		14,500*	12,900*		12,400*		
	35	16,700*	14,600*	12,600*	13,600*	11,700*		11,600*		
	40	15,400*	13,400*	12,100*	12,500*	10,500*	7,900*	10,800*	9,500*	
	50	12,900*	12,100*	11,000*	10,000*	8,000*	7,400*	9,200*	7,800*	5,900*
	60	11,700*	10,900*		7,800*	7,400*	6,600*	7,400*	6,100*	5,500*
	70	10,100*			7,200*	6,600*	5,300*	5,800*	5,500*	5,000*
	80				5,900*			5,300*	5,000*	3,800*
	90							4,400*	3,700*	
60	20	23,700*								
	25	22,300*			16,200*			13,700*		
	30	20,700*	16,800*		15,400*			13,100*		
	35	19,200*	15,900*	12,900*	14,700*	12,600*		12,400*		
	40	17,600*	15,000*	12,600*	13,900*	11,700*		11,800*	10,100*	
	50	15,500*	13,100*	11,800*	12,200*	9,700*	7,600*	10,400*	8,700*	
	60	13,500*	12,200*	11,000*	10,200*	7,900*	7,200*	9,000*	7,300*	5,700*
	70	12,300*	11,400*	10,100*	8,000*	7,400*	6,500*	7,600*	5,900*	5,300*
	80	11,300*	10,400*		7,500*	7,000*	5,500*	6,000*	5,500*	4,800*
	90				6,900*	5,800*		5,500*	5,100*	3,900*
	100				5,500*			5,100*	4,300*	
	110							4,000*	3,100*	
80	25	23,400*								
	30	22,200*			16,000*			13,500*		
	35	20,900*	16,600*		15,400*			13,000*		
	40	19,700*	15,900*	12,800*	14,800*	12,400*		12,400*		
	50	17,100*	14,400*	12,300*	13,500*	10,800*	7,800*	11,300*	9,300*	
	60	15,500*	12,900*	11,700*	12,000*	9,200*	7,400*	10,100*	8,100*	5,800*
	70	13,900*	12,300*	11,000*	10,300*	7,800*	7,100*	9,000*	6,900*	5,500*
	80	12,600*	11,600*	10,300*	8,500*	7,500*	6,500*	7,700*	5,900*	5,200*
	90	11,900*	10,900*		7,700*	7,100*	5,600*	6,400*	5,500*	4,700*
	100	11,000*			7,200*	6,300*		5,700*	5,200*	4,000*
	110				6,500*	5,300*		5,300*	4,600*	3,100*
	120				5,200*			4,800*	3,700*	
	130							3,800*		
100	30	23,200*			16,500*					
	35	22,100*	17,300*		16,000*			13,400*		
	40	21,100*	16,500*		15,400*			12,900*		
	50	18,900*	15,300*	12,600*	14,300*	11,600*		12,000*	9,800*	
	60	16,800*	14,000*	12,100*	13,200*	10,200*	7,600*	11,000*	8,800*	5,900*
	70	15,500*	12,900*	11,600*	11,900*	8,800*	7,300*	9,900*	7,700*	5,700*
	80	14,100*	12,300*	11,000*	10,400*	7,800*	7,000*	8,900*	6,700*	5,400*
	90	12,800*	11,800*	10,400*	8,800*	7,500*	6,400*	7,800*	5,900*	5,100*
	100	12,200*	11,200*		7,800*	7,200*	5,700*	6,600*	5,600*	4,700*
	110	11,300	10,500*		7,400*	6,600*		5,800*	5,300*	4,000*
	120	9,700			7,000*	5,800*		5,500*	4,900*	3,300*
	130				6,200*			5,100*	4,200*	
	140				5,000*			4,500*	3,300*	
	150							3,500*		
120	30	23,900*								
	35	23,300*			16,400*					
	40	22,100*	17,100*		15,900*			13,300*		
	50	20,300*	16,000*	12,800*	14,900*	12,200*		12,500*	10,100*	
	60	18,400*	14,900*	12,300*	14,000*	11,000*	7,700*	11,600*	9,200*	
	70	16,700*	13,800*	11,900*	13,000*	9,700*	7,500*	10,700*	8,300*	5,800*
	80	15,500*	12,800*	11,500*	11,700*	8,500*	7,200*	9,800*	7,400*	5,500*
	90	14,300*	12,400*	11,000*	10,400*	7,800*	7,000*	8,800*	6,400*	5,300*
	100	12,800	11,900*	10,500*	9,000*	7,500*	6,400*	7,900*	5,800*	5,000*
	110	10,900	11,100	10,000*	7,900*	7,200*	5,800*	6,800*	5,600*	4,600*
	120	9,300	9,500		7,600*	6,900*	5,100*	5,900*	5,300*	4,100*
	130	8,000	8,200		7,200*	6,200*		5,600*	5,000*	3,500*
	140	6,900			6,800*	5,400*		5,300*	4,500*	
	150				5,900*			5,000*	3,800*	
	160							4,300*	3,000*	
	170							3,300*		

① Refer note #1-b, page 5.

(continued)

GENERAL INFORMATION ONLY

This information is for reference use only. Operators manual should be consulted and adhered to.
Please contact NESS & CAMPBELL CRANE at **info@nessandcampbell.com** for further information.

GENERAL INFORMATION ONLY

HC-218A jib capacities — open throat boom (U.S. units)

Refer to Notes page 5.

Boom length	Load radius	Capacities on outriggers — over side and 360° swing ①								
		30′ jib			45′ jib			60′ jib		
		Jib angles to boom (jib offset degrees)								
		0°	15°	30°	0°	15°	30°	0°	15°	30°
Feet	Feet	Pounds	Pounds	Pounds	Pounds	Pounds	Pounds	Pounds	Pounds	Pounds
140	35	23,700*								
	40	22,900*			16,300*			13,600*		
	50	21,310*	16,400*	12,900*	15,400*	12,600*		12,900*		
	60	19,600*	15,500*	12,600*	14,600*	11,600*	7,800*	12,100*	9,600*	
	70	18,000*	14,500*	12,200*	13,700*	10,500*	7,600*	11,300*	8,800*	5,900*
	80	16,500*	13,600*	11,800*	12,800*	9,400*	7,400*	10,500*	8,000*	5,700*
	90	14,700	12,800*	11,400*	11,600*	8,200*	7,200*	9,600*	7,100*	5,400*
	100	12,300	12,400*	11,000*	10,500*	7,800*	6,900*	8,800*	6,300*	5,200*
	110	10,400	10,700	10,600*	9,200*	7,500*	6,400*	7,900*	5,800*	5,000*
	120	8,900	9,100	9,300	8,000*	7,300*	5,800*	7,000*	5,600*	4,600*
	130	7,600	7,800		7,700*	7,000*	5,300*	6,100*	5,300*	3,900*
	140	6,500	6,600		6,700	6,400*		5,700*	5,100*	3,400*
	150	5,500			5,700	5,800*		5,500*	4,700*	3,000*
	160	4,700			4,900	5,100*		5,100	4,100*	
	170				4,200			4,300	3,500*	
	180							3,700		
	190							3,200		
160	40	23,500*			16,500*					
	50	22,000*	16,800*		15,800*			13,200*		
	60	20,600*	16,000*	12,700*	15,000*	12,000*		12,500*	9,900*	
	70	19,100*	15,100*	12,400*	14,300*	11,100*	7,700*	11,800*	9,200*	
	80	17,200	14,300*	12,100*	13,500*	10,100*	7,500*	11,000*	8,400*	5,800*
	90	14,200	13,400*	11,700*	12,600*	9,100*	7,300*	10,300*	7,700*	5,600*
	100	11,900	12,300	11,400*	11,600*	8,000*	7,100*	9,500*	6,900*	5,400*
	110	10,000	10,300	10,700	10,100	7,800*	6,800*	8,800*	6,100*	4,700*
	120	8,400	8,700	9,000	8,600	7,500*	6,000*	8,000*	5,800*	4,100*
	130	7,100	7,400	7,600	7,300	7,300*	5,200*	7,100*	5,600*	3,500*
	140	6,000	6,200		6,200	6,600	4,500*	6,300*	5,400*	3,100*
	150	5,000	5,200		5,200	5,600		5,400	5,100*	2,700*
	160	4,200	4,400		4,400	4,700		4,500	4,600*	2,400*
	170	3,500			3,700	3,900		3,800	4,100*	
	180	2,900			3,100			3,200	3,500	
	190				2,500			2,600	2,900	
	200							2,100		
	210							1,700		
180	50	22,700*	17,300*		16,100*			13,500*		
	60	21,400*	16,400*	12,800*	15,400*	12,400*		12,800*		
	70	20,000*	15,600*	12,600*	14,700*	11,600*	7,800*	12,200*	9,500*	
	80	16,700	14,800*	12,300*	14,000*	10,700*	7,600*	11,500*	8,800*	5,800*
	90	13,800	14,100*	11,800*	13,300*	9,800*	7,400*	10,800*	8,100*	5,700*
	100	11,400	11,900	10,200*	11,600	8,800*	7,100*	10,100*	7,400*	4,900*
	110	9,500	9,900	8,800*	9,700	7,900*	6,000*	9,300*	6,700*	4,200*
	120	7,900	8,300	7,700*	8,100	7,700*	5,200*	8,200	6,000*	3,600*
	130	6,600	7,000	6,800*	6,800	7,100*	4,500*	6,900	5,500*	3,100*
	140	5,500	5,800	6,000	5,700	6,100	4,000*	5,800	4,900*	2,700*
	150	4,600	4,800		4,700	5,100	3,500*	4,900	4,300*	2,300*
	160	3,800	4,000		3,900	4,300	3,000*	4,000	3,800*	2,100*
	170	3,000	3,200		3,200	3,500		3,300	3,400*	1,800*
	180	2,400	2,600		2,600	2,800		2,700	3,100	
	190	1,800			2,000	2,200		2,100	2,500	
	200				1,500			1,600	1,900	
[illegible]	[illegible]	23,100*			16,400*			13,700*		
	[illegible]	19,900*	16,700*	12,900*	15,700*	12,800*		13,100*		
	70	[illegible]	15,400*	12,700*	14,700*	12,000*	7,900*	[illegible]	[illegible]	
	80	[illegible]	[illegible]	11,200*	12,700*	11,100*	[illegible]		9,100*	5,900*
	90	12,500*		9,700*	11,000*	9,700*		9,700*	8,000*	5,300*
	100	11,000	[illegible]	[illegible]	9,700*		[illegible]	8,500*	7,000*	4,400*
	110	9,000	8,900*			[illegible]	5,100*	7,400*	6,000*	3,700*
	120	7,500	7,900	6,300*		6,400*	4,400*	6,500*	5,200*	3,200*
	130	6,200	6,500			5,700*	3,900*	5,700*	4,500*	2,700*
	140	5,100	[illegible]	[illegible]	5,200*	[illegible]	3,300*	5,100*	3,900*	2,300*
	150	4,100		4,300*	4,300		2,900*	4,400*	3,500*	2,100*
	160		3,500	3,700	3,400	[illegible]	[illegible]	3,600	3,100*	1,800*
	[illegible]	[illegible]	2,800		2,700	3,100		[illegible]	2,800*	1,600*
		1,900	2,100		2,100	2,400			[illegible]	
	190				1,500	1,800		1,600		

① Refer note #1-b, page 5.

GENERAL INFORMATION ONLY